INDUSTRIAL
RF HEATING

# ITK 200-1
# ITK 200-3

## Water cooled triode

**600 kW**

- Output power:
  588 kW in CW mode
- Anode voltage:
  ITK 200-1: 18 kV
  ITK 200-3: 20 kV
- Anode dissipation: 220 kW
- Frequency up to 30 MHz

THALES

*ITK 200-1*

The ITK 200-1 and the ITK 200-3 are high-power triodes designed specifically for industrial applications.

These tubes use a coaxial design and metal-ceramic technology. These triodes are designed to operate in CW mode. For operation in pulse mode, the parameters depend on each equipment characteristics. Contact us for specific information.
The ITK 200-1 and the ITK 200-3 are water cooled triodes.

These products are designed, developed and manufactured at an ISO 9001 registered production site.

## Electrical characteristics

| | | | |
|---|---|---|---|
| Filament | thoriated tungsten | | |
| Filament voltage (+ 5 %, - 10 %) (1) | 22.0 | V | |
| Filament current | 375 | A | |
| Surge current | 1 500 | A | max. |
| Cold resistance | 7 | m | |
| Capacitances: | | | |
| • grid-anode | 85 | pF | |
| • grid-cathode | 210 | pF | |
| • cathode-anode (2) | 6.5 | pF | |
| Amplification factor | 27 | | approx. |
| Transconductance (Va: 10 kV, Ia: 12 A) | 180 | mA/V | approx. |

## Mechanical characteristics

| | | | |
|---|---|---|---|
| Operating position | vertical, anode up or down | | |
| Weight | 22 | kg | approx. |
| Dimensions | see outline drawing | | |

## Maximum ratings

| | | |
|---|---|---|
| Frequency (3) | 30 | MHz |
| Anode voltage: | | |
| • ITK 200-1: | | |
| up to 10 MHz | 18 | kV |
| from 15 to 30 MHz | 15 | kV |
| • ITK 200-3: | | |
| up to 10 MHz | 20 | kV |
| Control grid voltage | - 1 500 | V |
| Anode current | 50 | A |
| Control grid current: | | |
| • at full load | 10 | A |
| • at no load | 12 | A |
| Peak cathode current | 280 | A |
| Anode dissipation: | | |
| • industrial cooling water | 200 | kW |
| • distilled or deionized water | 220 | kW |
| Grid dissipation: | | |
| • up to 10 MHz | 6 | kW |
| • from 10 to 30 MHz | 5.5 | kW |
| Grid resistance (tube non conducting) | 10 | K |

(1) At frequencies above 30 MHz, the filament voltage is reduced so that the ratio of filament voltage to current becomes the same as that without an anode voltage.
(2) Measured with a 40 x 40 cm shielding plate attached to the grid plate.
(3) Limited conditions above 30 MHz. Please consult Thales Electron Devices.

## Cooling

| | | | |
|---|---|---|---|
| Anode cooling | water | | |
| Cooling water flow and pressure gradient | see cooling curves | | |
| Temperature at outlet (industrial water) | 60 | °C | max. |
| Cooling water inlet pressure | 5 | bar | max. |
| Temperature at any point on tube envelope | 220 | °C | max. |
| Air flow on filament head | 2 | $m^3$/min | |

## Typical operation (4)

| Examples | Class C RF oscillator for industrial applications 1 | 2 | |
|---|---|---|---|
| Frequency | 10 | 30 | MHz |
| Anode voltage | 16.5 | 15 | kV |
| Grid bias | - 1 060 | - 990 | V |
| Grid voltage | 1 845 | 1 755 | V |
| Anode current | 48 | 46.7 | A |
| Grid current, on load | 7.4 | 7.5 | A |
| Anode input power | 792 | 700 | kW |
| Anode output power | 588 | 515 | kW |
| Anode dissipation | 191 | 173 | kW |
| Grid dissipation | 5.1 | 5.1 | kW |
| Grid resistance | 145 | 132 | |
| Feedback ratio | 12.7 | 13.4 | % |
| Oscillator efficiency | 74.25 | 73.6 | % |

(4) Operation with higher frequencies on request.

## Cooling curves

Distilled, deionized or tap water may be used for cooling.
The water flow rate and pressure drop required for a particular anode dissipation are indicated on the cooling curves.

Pa : anode dissipation

Δp : pressure drop across the water cooler

q : water flow rate

$T_{out}$ : outlet water temperature

(for an inlet water temperature of 20°C with industrial water and 50°C with distilled or deionized water).

### Industrial water - minimum resistivity : 5 kΩ.cm

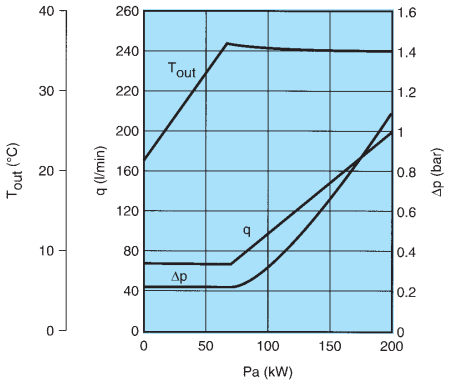


### Distilled or deionized water - minimum resistivity : 50 kΩ.cm

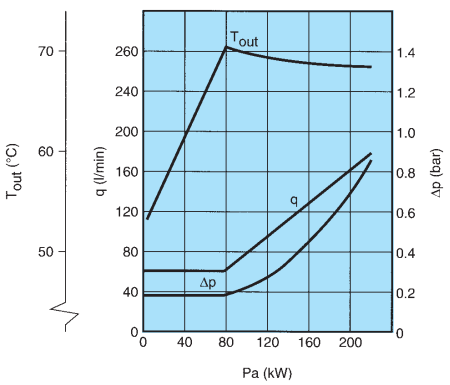

# ITK 200-1
# ITK 200-3

## Constant current characteristics

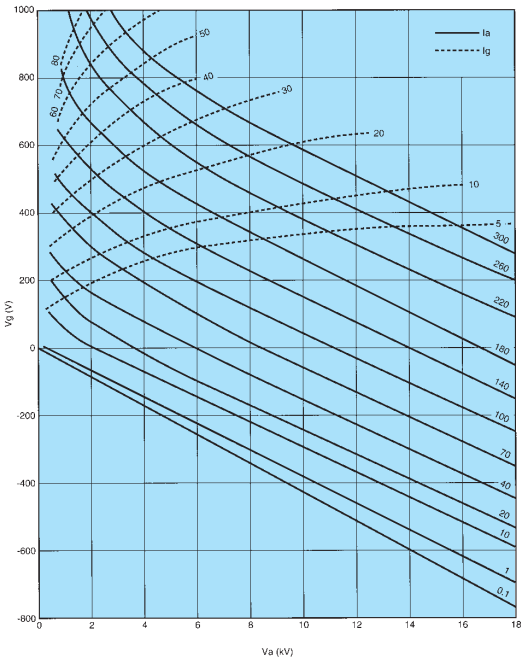


## ITK 200-1 - Outline drawing (dimensions in mm)

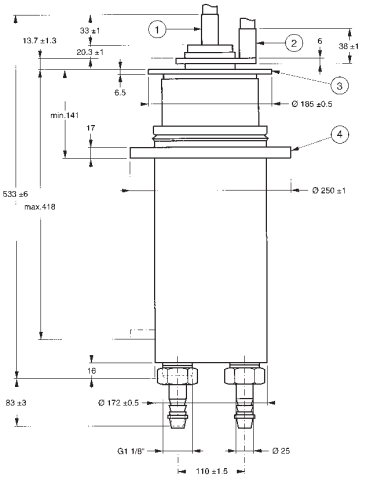


1 Filament
2 Filament-cathode
3 Grid
4 Anode

## ITK 200-3 - Outline drawing (dimensions in mm)

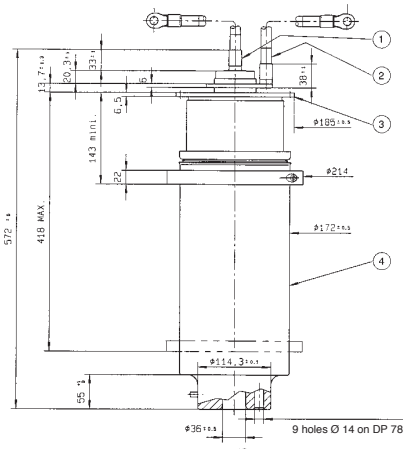


1 Filament
2 Filament-cathode
3 Grid
4 Anode

## ITK 200-1 - Top view (dimensions in mm)

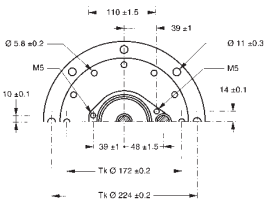

## ITK 200-3 - Top view (dimensions in mm)

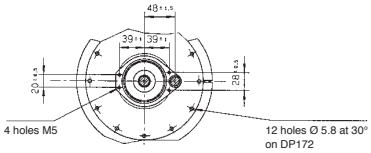


*This document cannot be considered to be a contractual specification. The information given herein may be modified without notice due to product improvement or further development. Consult Thales Electron Devices before making use of this information for equipment design.*

For further information, please contact:


**THALES ELECTRON DEVICES**
2 bis, rue Latécoère - 78941 Vélizy Cedex - France
Tel: + 33 1 30 70 35 00 - Fax: + 33 1 30 70 35 35
www.thalesgroup.com/electrondevices


P.409/ 2000.01 - Photos : Thales Electron Devices.